sunseeker

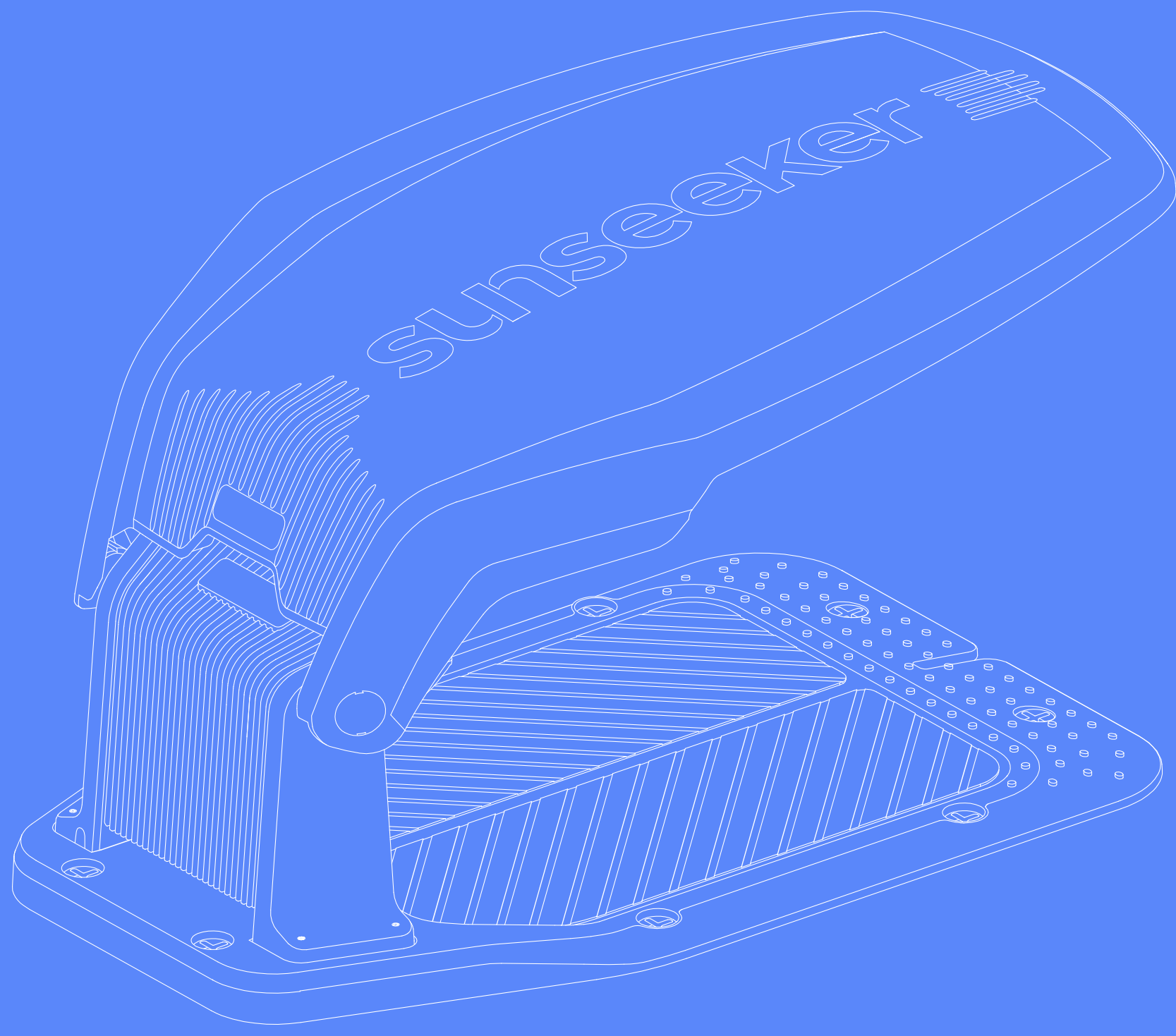

sunseeker Garage

Quick Start Guide

Original Instructions

Read the operator's guide carefully and make sure that you understand the instructions before you use the product

For V3/V3 Plus/S3/S3 Plus

Installation

Box Contents

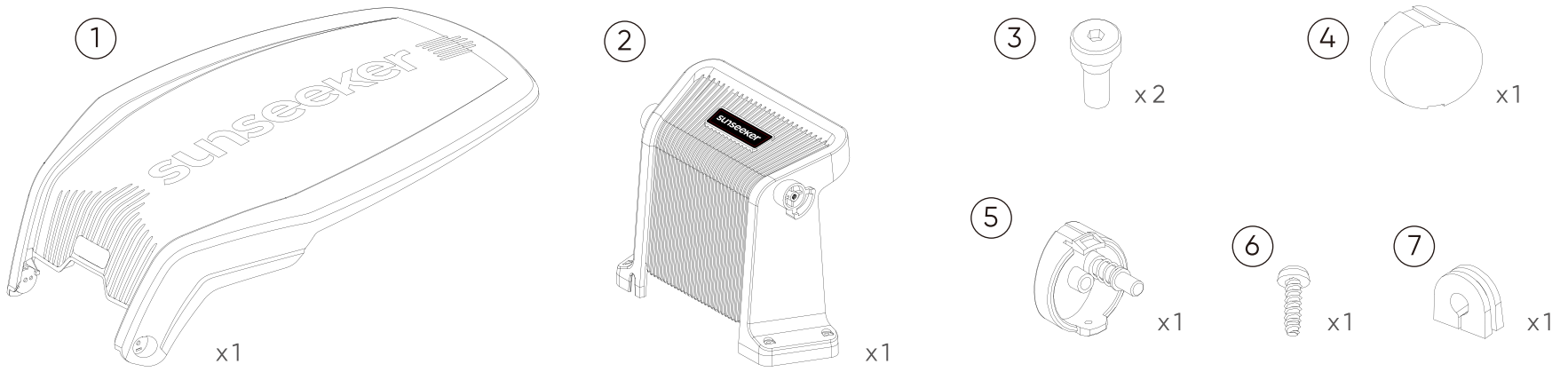

1

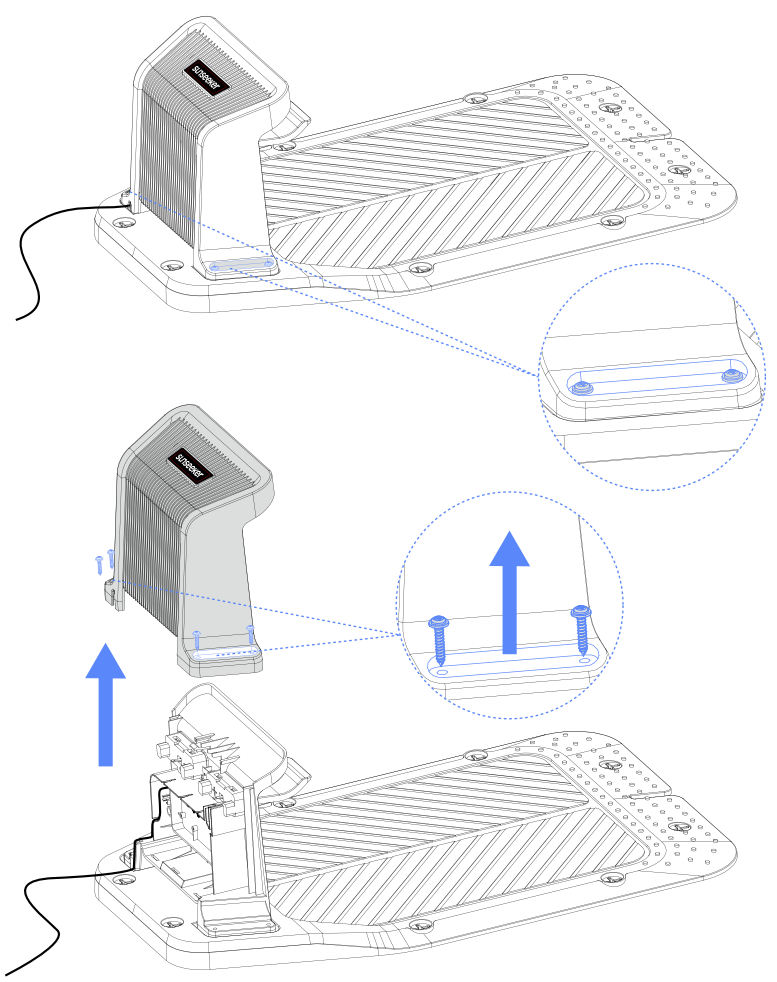

2

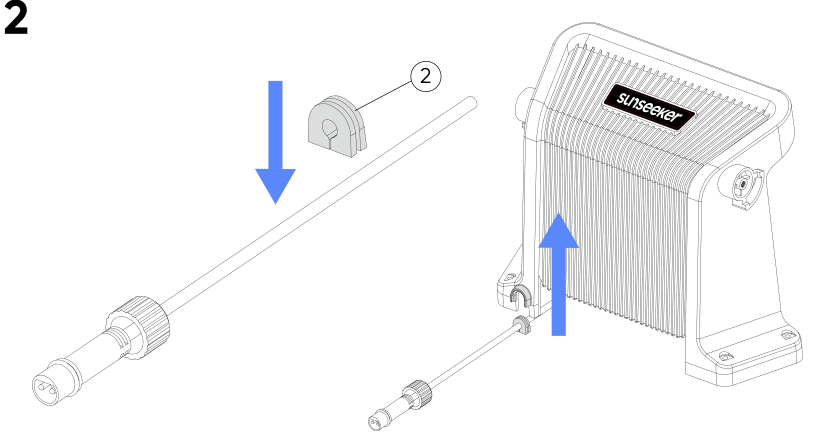

3

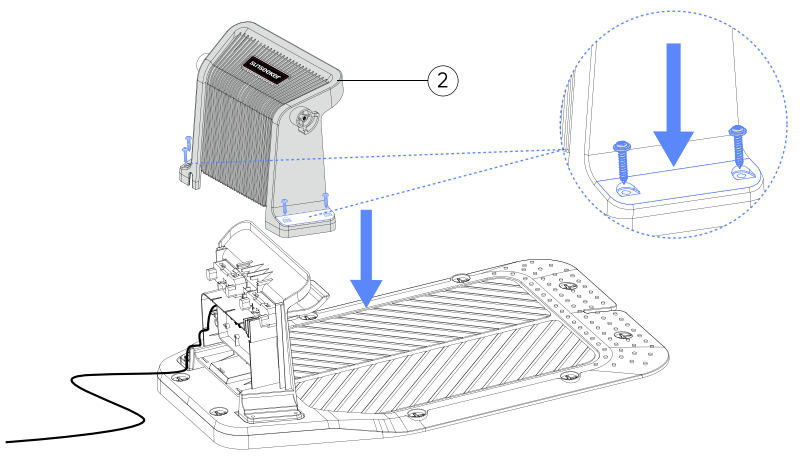

4

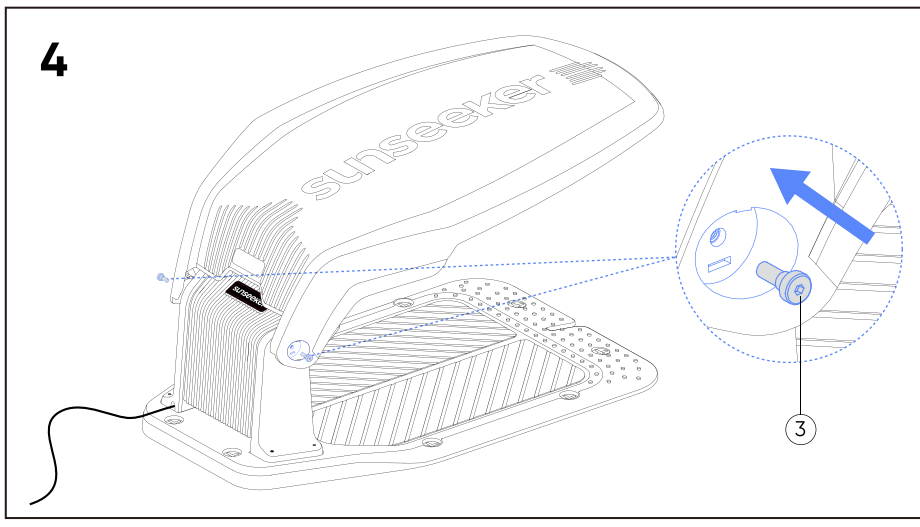

5

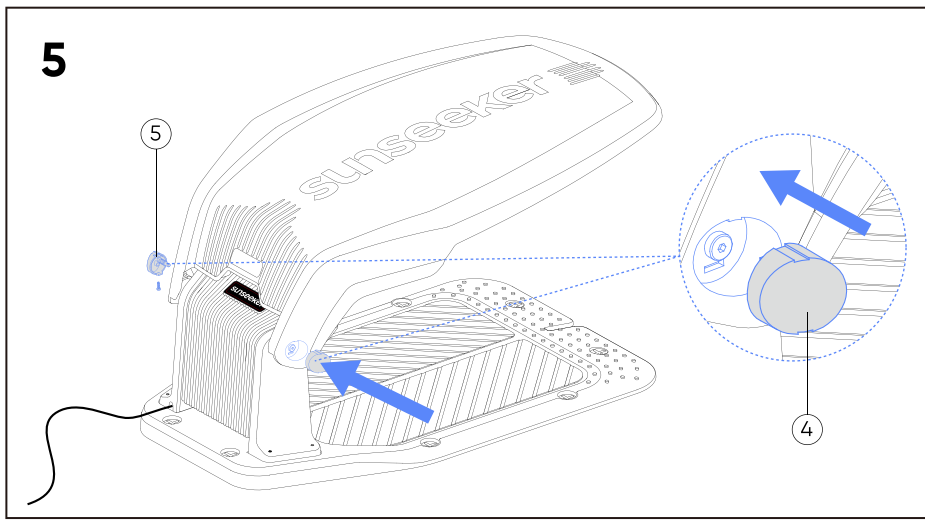

6

7

Installation Complete

Angle Adjustment

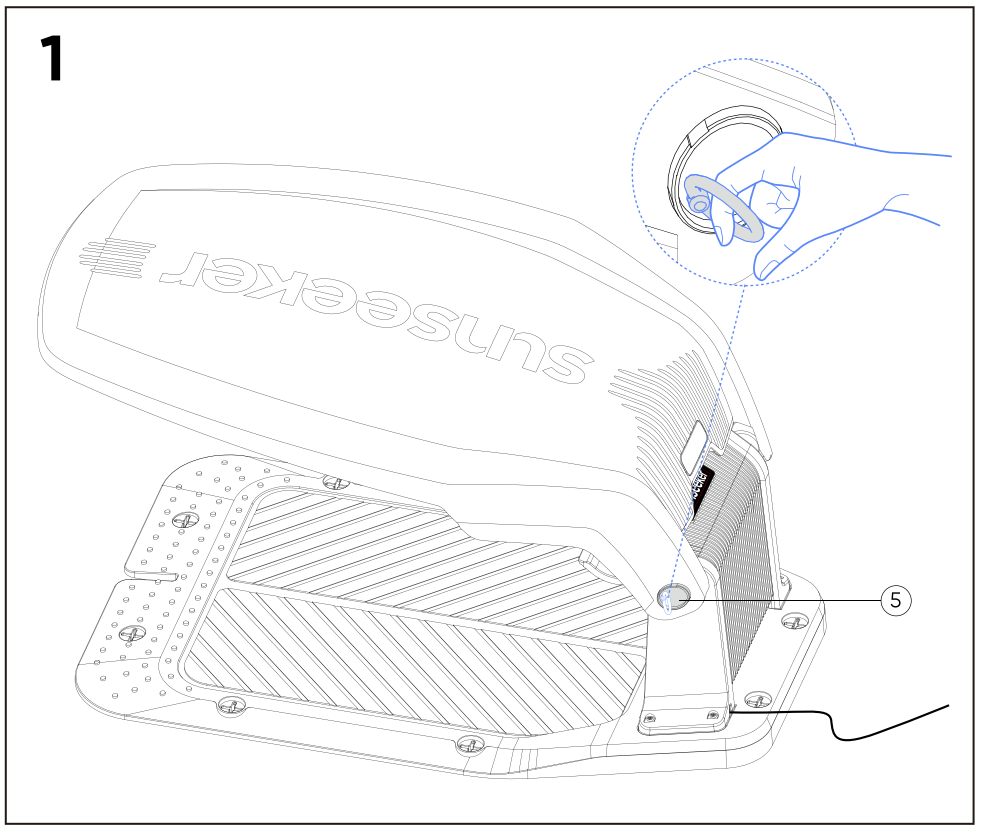

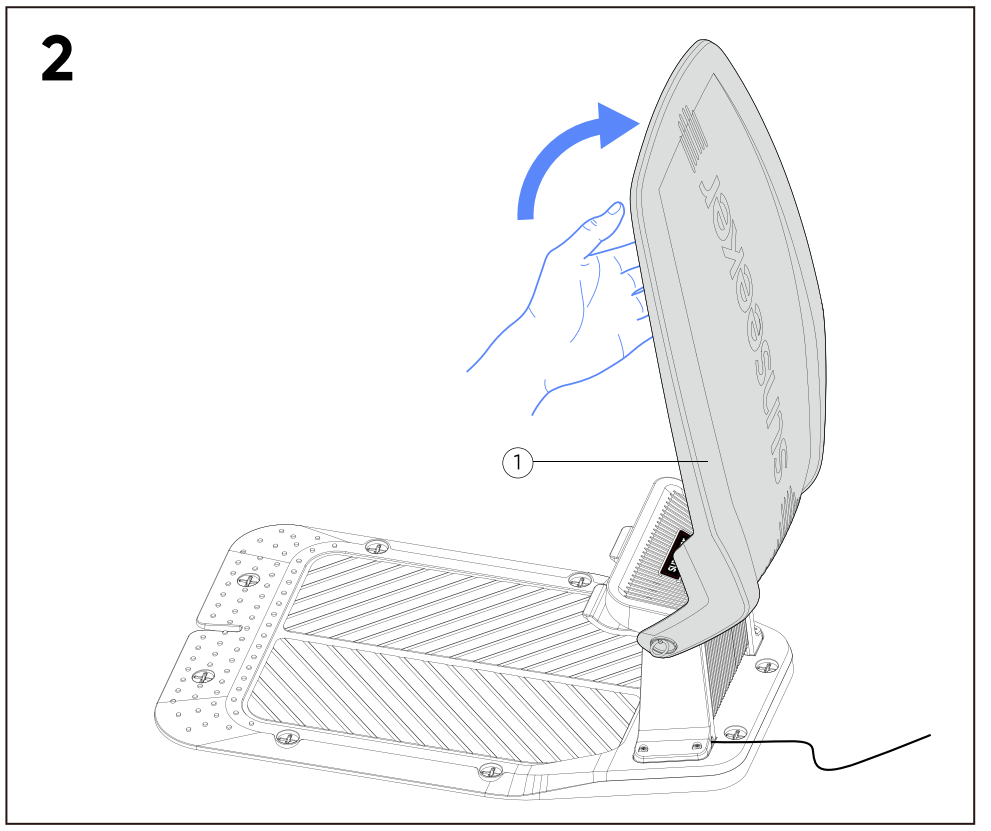

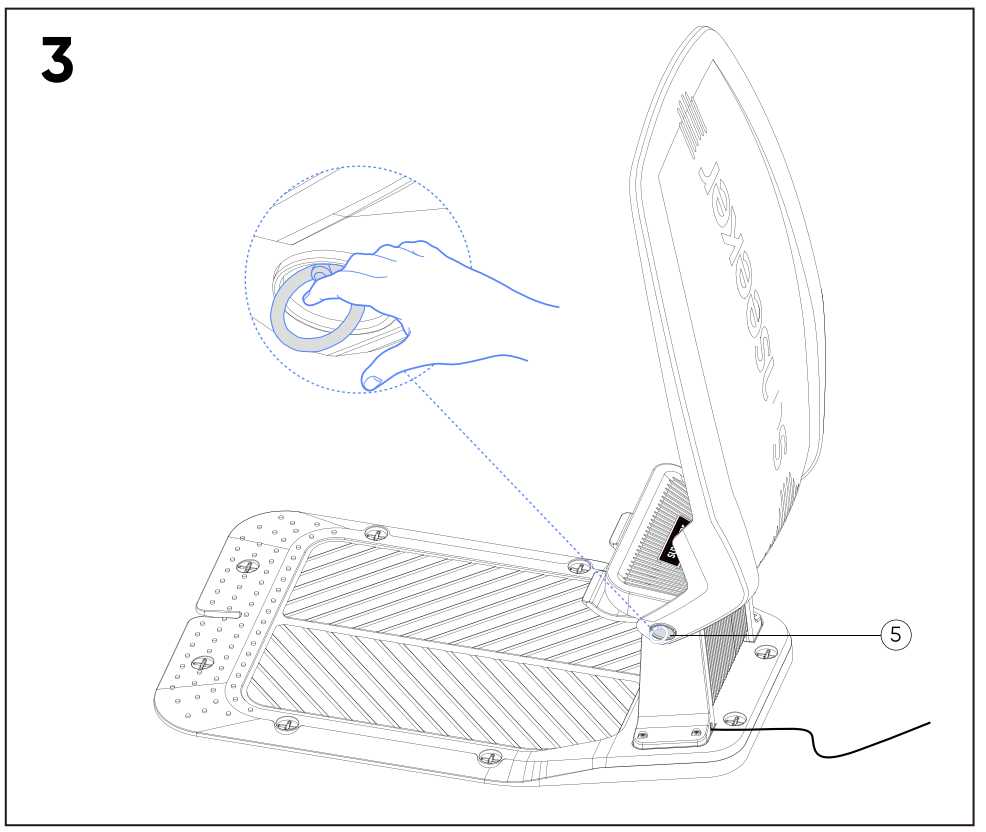

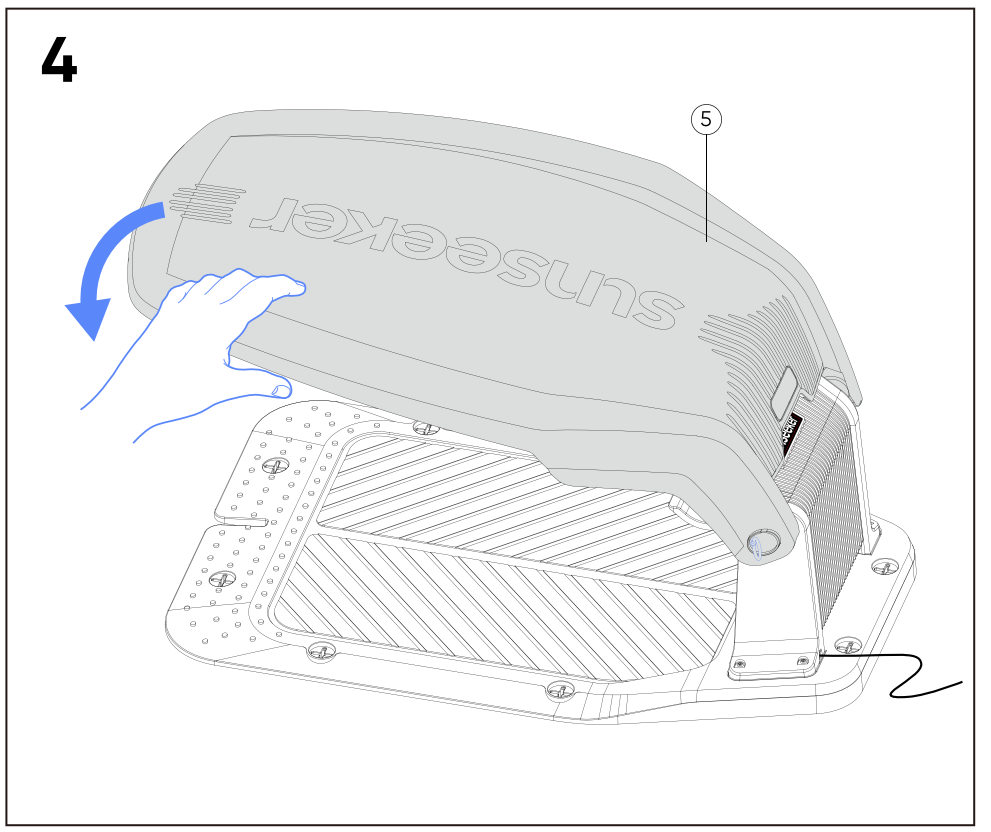

Caution

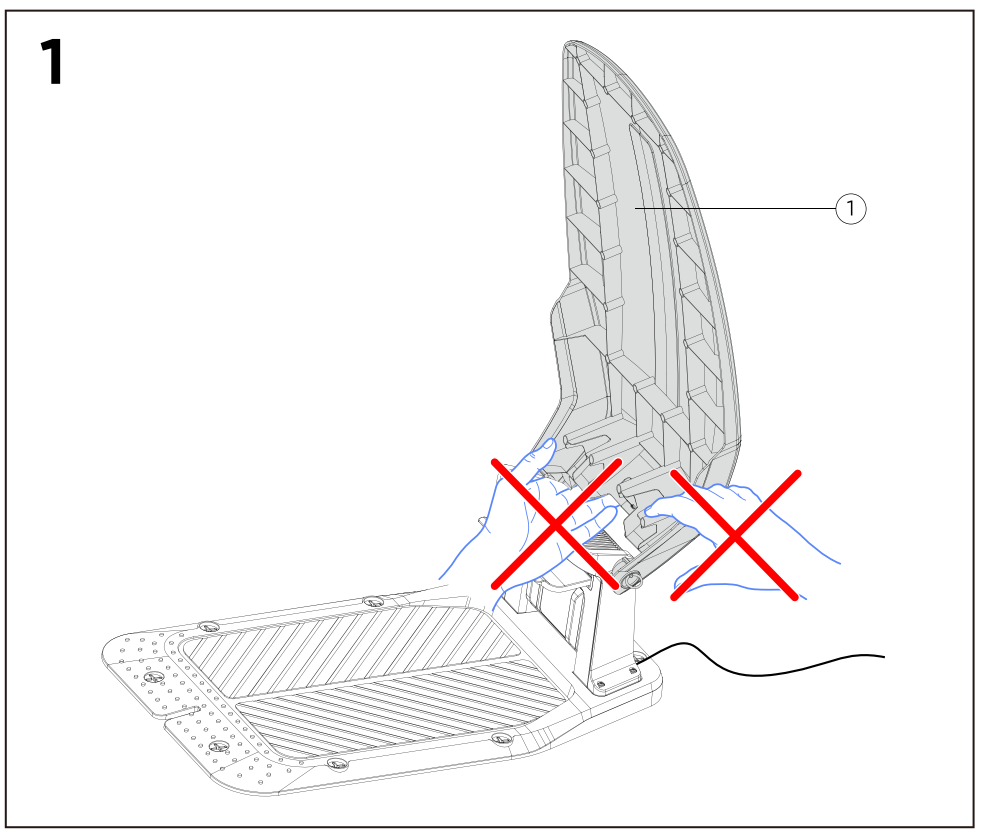

sunseeker